Notes

1.For double shaft version add D to end of part Number e.g. HT23-397D

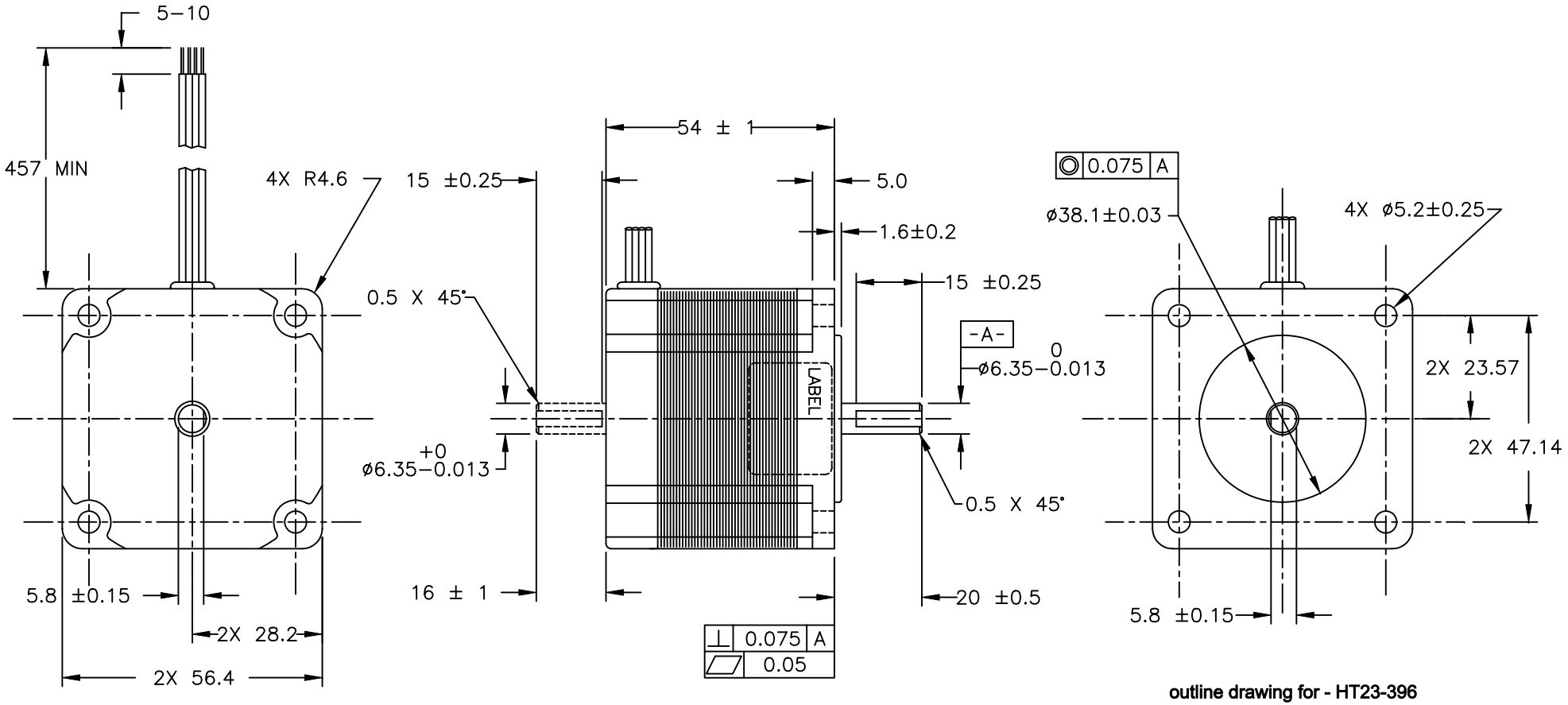

outline drawing for - HT23-396
- HT23-397
- HT23-398

TOLERANCES	THIRD ANGLE PROJECTION		APPLIED MOTION PRODUCTS, INC.		
DECIMALS: MM (INCH) X.XXX= ±0.01 (.005) X.XX = ±0.10 (.010) X.X = ±0.20 (.020) ANGLES: MACH. = ±.5° CHAM. = ±5°	APPROVALS	DATE	STEP MOTOR OUTLINE		
	DRAWN		B	DWG NO. 23HT54	REV
	CHECKED				
COMPUTER DATA BASE DRAWING	APPROVED		SCALE: FULL	SHEET 1 OF 1	